| Catalog # | Type |
|---|---|
| Project | |
| Notes | Date |
| Prepared by | |

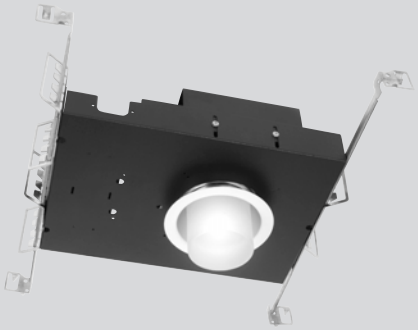

# 4" LED/vHealth™ MRI

LED 4" Luna Non-Ferrous MRI Downlight, IC Rated, 750-5000 Lumens

## Description

Designed for medical imaging areas. 4 inch LED recessed, IC rated luminaire with medium beam spread, featuring superior thermal management with low profile projection into the plenum. Light engine features LED module and LED driver with outputs ranging from 750 to 5000 lumens and color temperatures from 2700 to 5000K. A wide selection of drivers, reflector finishes and emergency battery back-up options available.

## Specifications and Features

### Construction

Non-ferrous mounting frame with integral junction box featuring hinged access covers and spring retaining latches; (3) ¾" knockouts allowing straight conduit runs. Listed for (8) #12 AWG (4 in, 4 out), 90° C conductors and feed through branch wiring. LED module accessible from below ceiling. Remote mount driver. Reflectors are held in place by friction clips, securing reflector flange tightly to finished ceiling. Vertically adjustable mounting brackets, accessible from below, accept a variety of mounting bars. Provided as standard with rigid formed, galvanized bar hangers which incorporating joist positioning tabs, integral nails, auxiliary nail holes and T-bar slots. Suitable for joist spacing from 12 to 24".

### Light Engine

LED module produces up to 107 lumens per watt. Output ranges from 750 to 5000 lumens with (4) standard color temperatures. Color variations are less than 3-step MacAdam ellipses and have greater than 85 CRI at all color temperatures. Rated life in excess of 50,000 hours at 70% of initial lumen output ($L_{70}$≥50,000 hours). Standard driver features auto reset thermal protection and 0-10V dimming to 1% of light output with flicker free operation. Optional 0-10V to 0.1%, Triac (phase control) and Lutron Hi-Lume 2 wire and Ecosystem Fade-to-Black dimming drivers available.

### Optics

LED module features soft white acrylic window, obscuring LED's, preventing pixilation and producing uniform brightness. Reflectors are a one-piece spinning from heavy gauge, high purity aluminum and are self-flanged. Reflectors are available in both Anti-Microbial Alzak® and painted finishes, producing a uniform distribution free of streaks, striations or hotspots while also provide superior cutoff and brightness control. Standard distribution is medium with lens options available that include glass and polycarbonate materials with a variety of optical properties.

### Controls

Compatible with a wide range of controls systems depending on driver selected. Standard driver features SensorReady technology for simple 2 wire connection to motion and daylight harvesting sensors. An open source architecture allows for the use of a wide variety of sensors and the ability to control individual or grouped luminaires through wireless communications.

### Listings

Manufactured and Listed to UL 1598, ETL and CSA standards. IC rated, insulation may be in direct contact with luminaire. Suitable for Damp Locations; Wet location under covered ceiling. Ambient operating temperature range: -20°C to 30°C. All photometric tests performed by an accredited NVLP facility and in accordance to IESNA LM-79-2008 testing procedures.

### Warranty

5-year limited warranty on LED module and driver.

## Ordering Information

EXAMPLE: VGCIC4EVHMRIU-1130K-LVGC421-150-1FR-SGC-AM

| Series/Source | Voltage | Lumens | Kelvin | Reflector | Finish | Options |
|---|---|---|---|---|---|---|
| VGCIC4EVHMRI<br>4" round,<br>Luna, IC Rated | U[1] – 120V-277V<br>1 – 120 Volts | -07 – 750<br>-11 – 1100<br>-15 – 1500<br>-20 – 2000<br>-30 – 3000<br>-40[3] – 4000<br>-50[3,4] – 5000 | 27K – 2700K<br>30K – 3000K<br>35K – 3500K<br>40K – 4000K<br>50K – 5000K | LVGC421-150 | SCL-AM<br>SGC-AM<br>WHT-AM | DL-2[2]<br>LDE1[3]<br>TDM[4]<br>DTD[6]<br>EM-17[7]<br>HCR[10]<br>PF<br>AT |

**Anti-Microbial Reflector Finish Options**

**SCL-AM** - Specular Clear
**SGC-AM** - Soft Glow Clear
**WHT-AM** - White Painted

All trims supplied standard with white painted flange.

**Notes**

**1** - Must provide voltage when optional drivers are selected.
**2** - DL-2 Not available above 3000 Lumens.
**3** - LDE1 not available above 4000 Lumens.
**6** - DTD not available above 4000 Lumens.
**10** - HCR not available in 5000K.

**Options**

**DL-2[2]** - Lutron 2 wire Hi-Lume Dimming Driver.
**LDE1[3]** - Lutron EcoSystem Fade-to-Black™.
**TDM[4]** - Triac Dimming Driver.
**DTD[6]** - 0-10V, 0.1% dimming.
**EM-17[7]** - Emergency battery back-up. Remote test button & indicator Light.
**HCR[10]** - 90 CRI (minimum).
**PF** - Polished Flange.
**AT** - Air Tight.

ign details in any manner which does not alter the installed appearance or reduce performance and intended function.



vHealth™ is a trademark of Lexington Lighting Group, LLC dba Vantage Lighting

# LED 4” Luna Non-Ferrous MRI Downlight, IC Rated, 750-5000 Lumens

Above Ceiling Height
with 5/8” Ceiling
- 3.64” ≤ 3000L
- 3.84” 4000L & 5000L

Above Ceiling Height
- Max Ceiling Thickness 1.17” - 3.10”
- Min Ceiling Thickness 0.20” - 4.07”

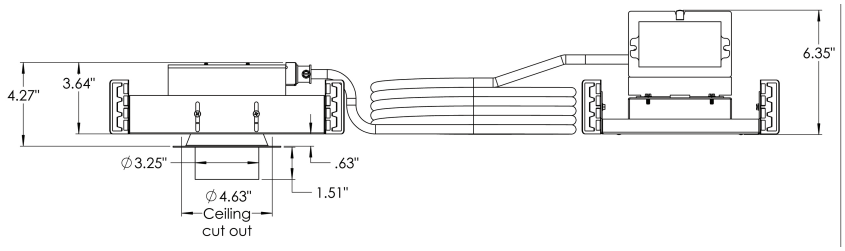


| Lumens | Wattage* |
|---|---|
| 750 | 9.4 |
| 1100 | 15.4 |
| 1500 | 21.6 |
| 2000 | 27.2 |
| 3000 | 33.2 |
| 4000 | 45.6 |
| 5000 | 58.5 |

*All measured at 3000K*

**Actual Wattage/Lumens may vary.*

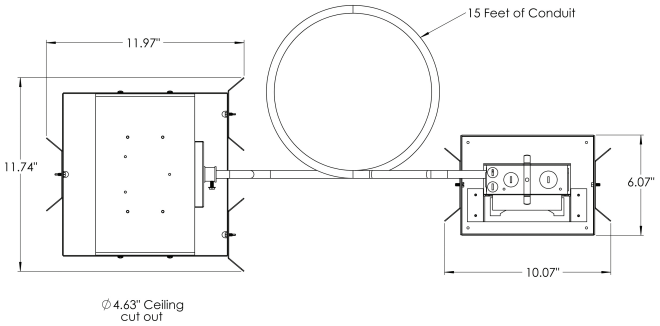


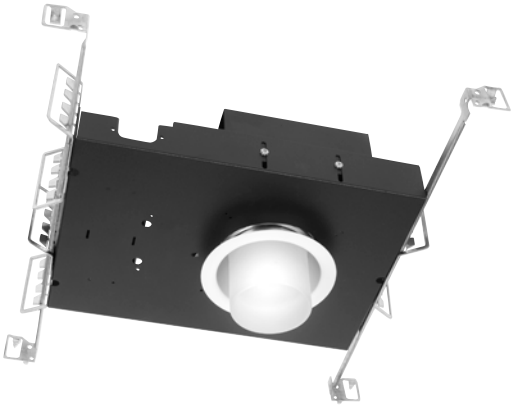

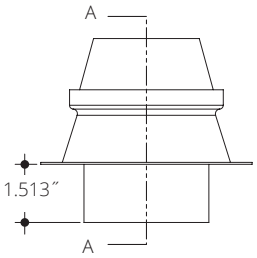


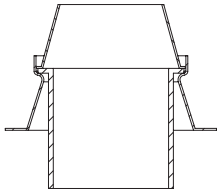

## Photometrics

**Test Number**
PHM-RPT-180309-13
**Model**
VGCIC4EVHMRIU-1535K
**Lumens**
781.08
**Efficacy**
37.49
**SC**
0.9908

**Curve**

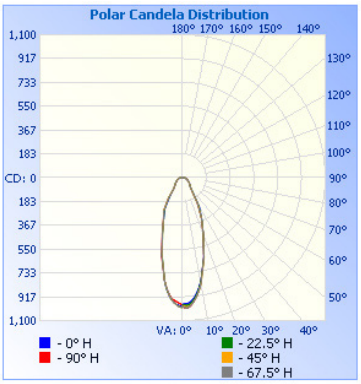


**Cone of Light**

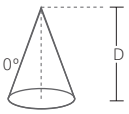


| | Center Beam fc | Beam Width | |
|---|---|---|---|
| 1.7 | 340 | 1.2 | 1.2 |
| 3.3 | 90.3 | 2.2 | 2.3 |
| 5.0 | 39.3 | 3.4 | 3.4 |
| 6.7 | 21.9 | 4.5 | 4.6 |
| 8.3 | 14.3 | 5.6 | 5.7 |
| 10.0 | 9.83 | 6.8 | 6.9 |

**Candela Table**

| Degrees Vertical | Candela |
|---|---|
| 0.0 | 983 |
| 1.0 | 971 |
| 3.0 | 962 |
| 5.0 | 936 |
| 7.0 | 893 |
| 9.0 | 838 |
| 10.0 | 807 |
| 15.0 | 632 |
| 20.0 | 467 |
| 25.0 | 347 |
| 30.0 | 256 |
| 35.0 | 140 |
| 40.0 | 92 |
| 45.0 | 80 |
| 50.0 | 69 |
| 55.0 | 59 |
| 60.0 | 50 |
| 65.0 | 43 |
| 70.0 | 36 |
| 75.0 | 30 |
| 80.0 | 25 |
| 85.0 | 21 |
| 90.0 | 17 |
| 95.0 | 15 |
| 100.0 | 11 |

**Zonal Lumen Summary**

| Zone | Lumens | % Luminaire |
|---|---|---|
| 0-30 | 419.9 | 53.8 |
| 0-40 | 523.6 | 67 |
| 0-60 | 643.1 | 82.3 |
| 60-90 | 104.2 | 13.3 |
| 70-100 | 74.9 | 9.6 |
| 90-120 | 25.4 | 3.3 |
| 0-90 | 747.3 | 95.7 |
| 90-180 | 33.8 | 4.3 |
| 0-180 | 781.1 | 100.0 |

**VANTAGE LIGHTING vHealth™ Multipliers**

| CRI | MULTIPLIER |
|---|---|
| 80 | 1 |
| 90 | 0.81 |

| KELVIN | MULTIPLIER |
|---|---|
| 5000K | 1.098 |
| 4000K | 1.035 |
| 3500K | 1 |
| 3000K | 0.975 |
| 2700K | 0.939 |

| FINISH | MULTIPLIER |
|---|---|
| SCL | 1 |
| SGC | 0.95 |
| WHT | 0.87 |