Catalog #	Type
Project	
Notes	Date
Prepared by	

4" LED/F-Class GEN V

LED 4" Open Downlight, non-IC, 750-7000 Lumens

Description

4 inch LED recessed, non-IC luminaire with medium beam spread, featuring superior thermal management with low profile projection into the plenum. Light engine features LED module and LED driver with outputs ranging from 750 to 7000 lumens and color temperatures from 2700 to 5000K. A wide selection of driver, reflector finishes and emergency battery back-up options available.

Specifications and Features

Construction

Galvanized steel mounting frame with integral junction box featuring hinged access covers and spring retaining latches; (3) ¾" knockouts allowing straight conduit runs. Listed for (8) #12 AWG (4 in, 4 out), 90° C conductors and feed through branch wiring. Driver, LED module and optional battery backup accessible from below ceiling. Reflectors are held in place by friction clips, securing reflector flange tightly to finished ceiling.

Vertically adjustable mounting brackets, accessible from below, accept a variety of mounting bars. Provided as standard with rigid formed, galvanized bar hangers which incorporating joist positioning tabs, integral nails, auxiliary nail holes and T-bar slots. Suitable for joist spacing from 12 to 24".

Light Engine

LED module produces up to 107 lumens per watt. Output ranges from 750 to 7000 lumens with (4) standard color temperatures. Color variations are less than 3-step MacAdam ellipses and have greater than 80 CRI at all color temperatures. Rated life in excess of 50,000 hours at 70% of initial lumen output (L_{70}≥50,000 hours). Standard driver is Advance Xitanium featuring auto reset thermal protection and 0-10V dimming to 1% of light output with flicker free operation. Optional Triac (phase control) and Lutron Hi-Lume 2 wire dimming driver available.

Optics

LED module features soft white acrylic window, obscuring LED's, preventing pixilation and producing uniform brightness. Reflectors are a one-piece spinning from heavy gauge, high purity aluminum and are self-flanged. Reflectors are available in both Alzak® and painted finishes, producing a uniform distribution free of streaks, striations or hotspots while also provide superior cutoff and brightness control. Standard distribution is medium with lens options available that include glass and polycarbonate materials with a variety of optical properties.

Controls

Compatible with a wide range of controls systems depending on driver selected. Standard driver features SensorReady technology for simple 2 wire connection to motion and daylight harvesting sensors. An open source architecture allows for the use of a wide variety of sensors and the ability to control individual or grouped luminaires through wireless communications. Contact factory for option controls and sensors.

Listings

Manufactured and Listed to UL 1598, ETL and CSA standards. Non-IC rated. Insulation to be kept 3" from luminaire. Suitable for Damp Locations; Wet location under covered ceiling. All photometric tests performed by an accredited NVLP facility and in accordance to IESNA LM-79-2008 testing procedures. ENERGY STAR® certified product.

Warranty

5-year warranty on LED module, driver, housing and reflectors.

Ordering Information

EXAMPLE: A4VOFLEDU-1130K-L4060-SGC

Series/Source	Voltage	Lumens	Kelvin	Reflector	Finish	Options
A4VOFLED 4" round, non-IC	**U[1] – 120V-277V** 1 – 120 Volts 2 – 277 Volts	**-07 – 750** **-11 – 1100** **-15 – 1500** **-20 – 2000** -30 – 3000 -40[3] – 4000 -50[3,4] – 5000 -60[2,3,4] – 6000 -70[2,3,4] – 7000	27K – 2700K 30K – 3000K **35K – 3500K** 40K – 4000K 50K – 5000K	**L4060** *Medium Distribution* L4015[11] *Non Conductive Shower Trim*	**SCL** **SGC** WHT	DL-2[2] LDE1[3] TDM[4] DMX[5] DTD[6] EM-17[7] EMI-17[7] EM-20[8] HCR[10] PF

Options in purple qualify for the Velocity Same Day program up to 100 pieces (up to 30 in EM). Refer to Velocity Guide for complete details.

Notes

1 - Must provide voltage when optional drivers are selected.
2 - DL-2 Not available above 3000 Lumens.
3 - LDE1 not available above 4000 Lumens.
4 - TDM driver not available above 5000 Lumens.
5 - DMX not available above 6000 Lumens
6 - DTD not available above 4000 Lumens.
7 - EM17 and EMI17 for use up to 5000 lumens.
8 - EM20 for use above 5000 Lumens.
10 - HCR not available above 2000 Lumens.
11 - EMI not available with shower trim.

▲ Consulate Page OP-1 for additional housing and trim options.

Reflector Finish Options

SCL - Specular Clear
SGC - Soft Glow Clear
WHT - White Painted

All trims supplied standard with white painted flange.

Options

DL-2[2] - Lutron 2 wire Hi-Lume Dimming Driver.
LDE1[3] - Lutron EcoSystem Fade-to-Black™.
TDM[4] - Triac Dimming Driver. Not available above 5000 Lumens.
DMX[5] - DMX Dimming Driver with RDM.
DTD[6] - 0.1% dimming.

EM-17[7] **- Emergency battery back-up. Remote test button & indicator Light.**
EMI-17[7] **- Emergency battery back-up. Integral test button & indicator Light.**
EM-20[8] - Emergency battery back-up.
Remote test button & indicator Light.
HCR[10] - 90 CRI (minimum).
PF - Polished Flange.

Vantage reserves the right to change components, finishes or design details in any manner which does not alter the installed appearance or reduce performance and intended function.

LED 4" Open Downlight, non-IC, 750-7000 Lumens

Ceiling Cut Out 4.63˝

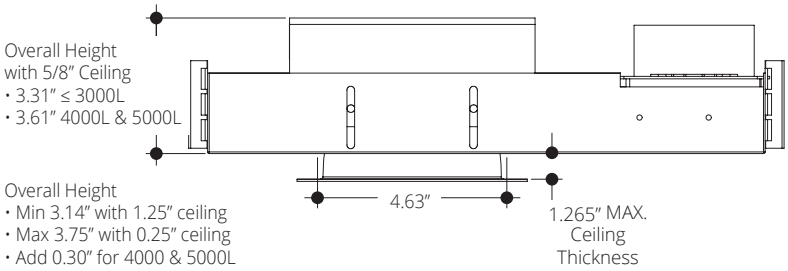

Lumens	Wattage*
750	9.4
1100	15.4
1500	21.6
2000	27.2
3000	33.2
4000	45.6
5000	58.5
6000	60.1
7000	85.3

All measured at 3000K
**Actual Wattage/Lumens may vary.*

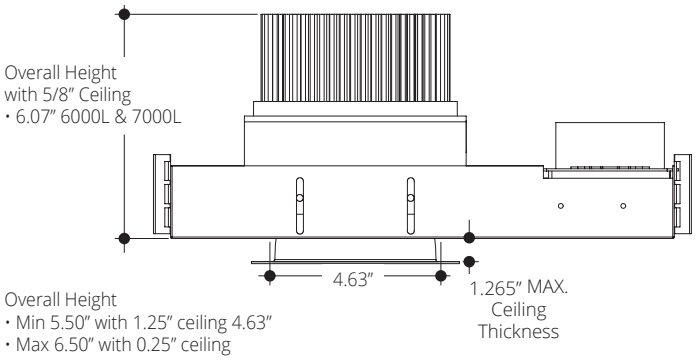

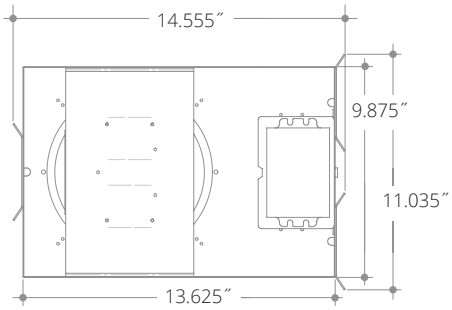

SHOWER TRIM – LED – ROUND 4˝ Aperture

L4015 Non Conductive Shower Trim

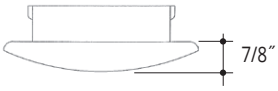

Photometrics

Test Number
L011705701
Model
A4V0FLED-2035K
Lumens
2259.94
Efficacy
89
SC
1.00

Curve

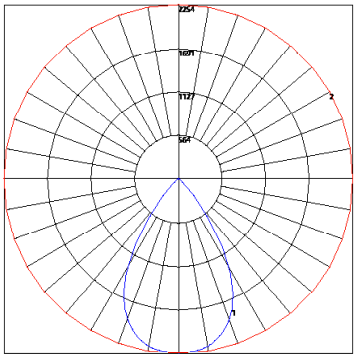

Cone of Light

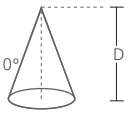

	Center Beam fc	Beam Width	
1.7	1,708	0.5	0.5
3.3	453	0.9	0.9
5.0	197	1.3	1.4
6.7	110	1.8	1.8
8.3	71.6	2.2	2.2
10.0	49.4	2.7	2.7

Candela Table

Degrees Vertical	Candela
0.0	2254
1.0	2251
3.0	2243
5.0	2233
7.0	2221
9.0	2203
11.0	2175
13.0	2136
15.0	2088
17.0	2030
19.5	1944
22.5	1809
25.5	1637
29.0	1392
33.0	1033
37.5	601
42.5	288
47.5	79
55.0	9
65.0	6
75.0	5
85.0	4
90.0	0

Zonal Lumen Summary

Zone	Lumens	% Luminaire
45	29006	29006
55	1754	1754
65	1587	1587
75	2159	2159
85	5130	5130

VANTAGE LIGHTING F-CLASS GEN V Multipliers

CRI	MULTIPLIER
80	1
90	0.81

KELVIN	MULTIPLIER
5000K	1.098
4000K	1.035
3500K	1
3000K	0.975
2700K	0.939

FINISH	MULTIPLIER
SCL	1
SGC	0.95
WHT	0.87