Catalog #	Quantity
Project	
Notes	Date
Prepared by	

3" LED/*Capela*®

LED 3" Regressed Lens Adjustable Downlight, 700-1300 Lumens

*New construction frame & IC-Rated box sold seperately

2700K 3000K 3500K 4000K

Features

Optics
Soft glow clear, specular clear and white finishes
Efficient optical design
15, 30, and 45 degree beam spreads
Frosted polycarbonate regressed lens

Controls
0-10V to 1% driver standard
0-10V to 0.1% &, Lutron, & Triac/Forward phase optional

Construction
Self-flanged cold-rolled steel housing
Polyester powder coat
Torsion springs for maximum ceiling retention
Optional IC-rated up to 1,300 lumens With IC Box (NCFIC)
Optional new construction frame (NCFAQ)

Electrical
Advanced QuickConnect for easy installation
High flux CoB array
80+ CRI standard, 90+ CRI optional
2700K, 3000K, 3500K, 4000K standard
High- performance Dim-to-Warm optional
70% lumen maintenance at 50,000 hours
120 – 277V Universal Input standard

Listings
Tested according to LM-79 and LM-80 standards
ETL certified to UL 1598 and UL 8750 requirements
Energy Star certified
Suitable for damp locations; Wet location under covered ceiling;
Not recommended for outdoor use
Buy American Act

Warranty
5-year limited warranty on LED components
Warranty terms located at: http://vantageltg.com/product-warranty/

Ordering Information

EXAMPLE: V3CRRADJU-07DTW-L2040-SGC-N-WHT-NCFIC-DL-2

Series	Voltage*	Lumens	Kelvin	Reflector	Finish	Distribution	Flange Finish	Frame	Options*
V3CRRADJ	**U** - 120V-277V **1** - 120 V **3** - 347V	**07** - 700 **13** - 1300	**27K** - 2700K **30K** - 3000K **35K** - 3500K **40K** - 4000K **DTW -** Dim-to-Warm (3000K-1800K)	**L2040**	**SCL** Specular Clear **SGC** Soft Glow Clear **WHT** White painted	**N** - 15° **M** - 30° **W** - 45°	**WHT** **BLK**	**NCFAQ** New Construction Frame **NCFIC** New Construction Frame w/ IC-RATED Box **RMDL** Remodeler	**DL-2** **LDE1** **L3D0** **LDE5** **EM** **HCR** **TDM** **XDM**

*Voltage Notes

1 - Lutron Drivers - please consult factory

3 - Step-down Transformer

*Options Notes

DL-2 - Lutron 2 wire Hi-Lume Dimming Driver.
LDE1 - Lutron EcoSystem Fade-to-Black™.
L3D0 - Hi-Lume Premier 0.1% EcoSystem.
LDE5 - 5% Dimming EcoSystem.
EM - Emergency battery back-up. Remote test button & indicator Light.
HCR - 90+ CRI
LDE1- Lutron EcoSystem Fade-to-Black™
TDM - Triac Dimming Driver (Foward Phase). Only available in 120V only.
XDM - 0-10V 0.1% Dimming.

Vantage reserves the right to change components, finishes or design details in any manner which does not alter the installed appearance or reduce performance and intended function. | Capela® is a registered trademark of Vantage Lighting.

Dimensional Data: LED 3" Regressed Lens Adjustable Downlight

Remodeler (standard) Ceiling Cut Out 3.250"

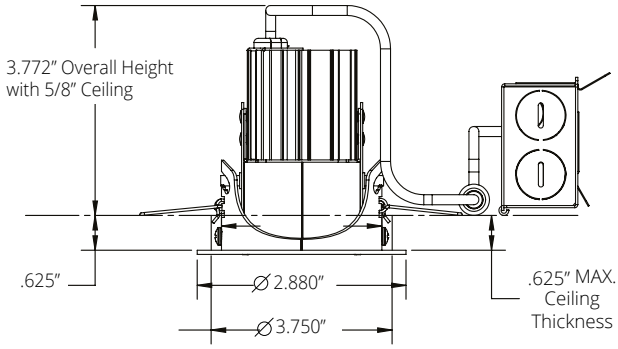

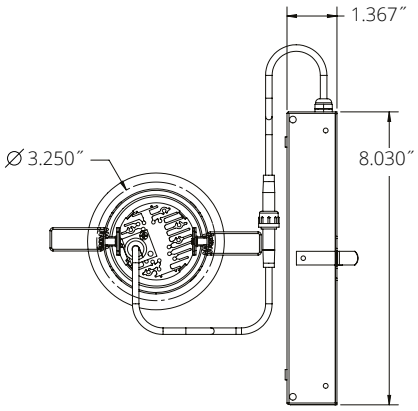

New Construction Frame (FCFAQ) Ceiling Cut Out 3.250"

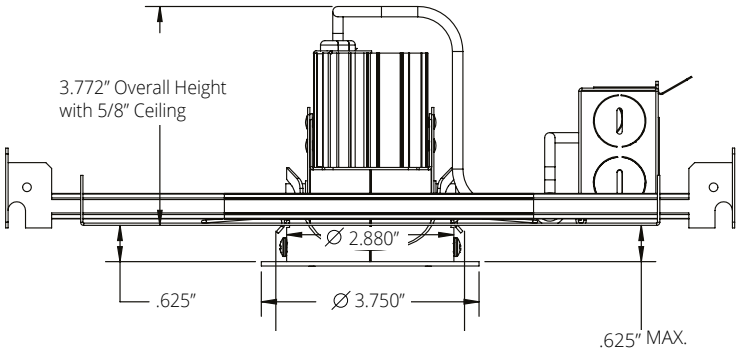

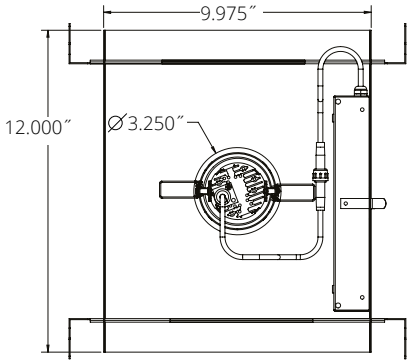

NCFIC (IC-RATED) Ceiling Cut Out 3.250"

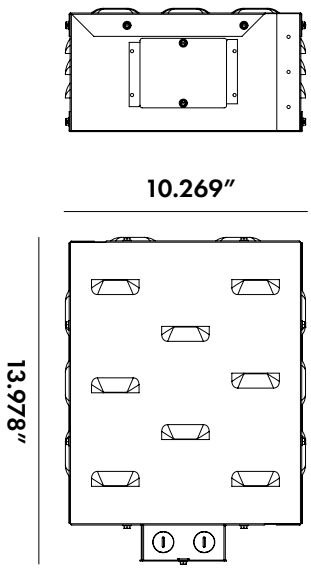

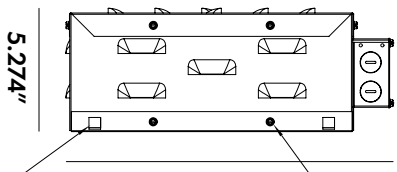

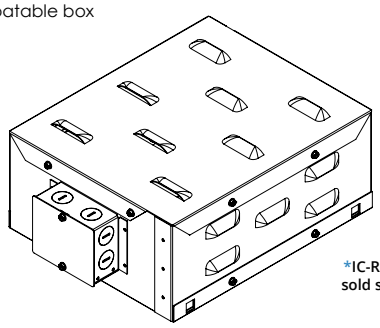

RMDL
(standard)

NCFAQ
(new construction frame)

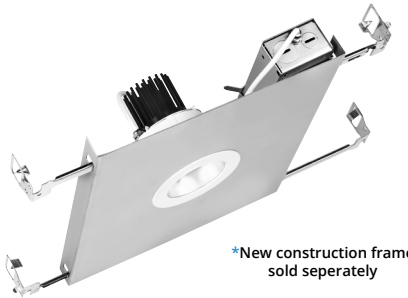

Photometeric Data: LED 3” Regressed Lens Adjustable Downlight

15° Distribution

Test Number
PHM-RPT-171026-D07
Model
V2CRRU-1335K-N
Lumens
1138.94
Efficacy
77.63
SC
0.9910

Curve

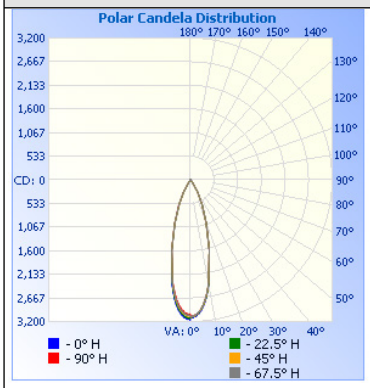

Cone of Light

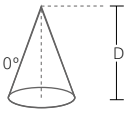

	Center Beam fc	Beam Width	
1.7	1071	1.0	0.9
3.3	284	1.9	1.8
5.0	124	2.8	2.8
6.7	68.9	3.8	3.7
8.3	44.9	4.7	4.6
10.0	30.9	5.6	5.6

Candela Table

Degrees Vertical	Candela
0.0	3094
5.0	2936
10.0	2373
15.0	1637
20.0	1027
25.0	624
30.0	329
35.0	97
40.0	35
45.0	20
50.0	11
55.0	8
60.0	6
65.0	5
70.0	5
75.0	5
80.0	5
85.0	5
90.0	3

Zonal Lumen Summary

Zone	Lumens	% Luminaire
0-30	998.5	87.7
0-40	1078.8	94.7
10-60	1102.1	95.8
60-90	15.1	1.3
0-90	117.3	98.1
90-180	21.7	1.9
0-180	1139.0	100.0

30° Distribution

Test Number
PHM-RPT-171026-D06
Model
V2CRRU-1335K-M
Lumens
1142.59
Efficacy
77.56
SC
0.9906

Curve

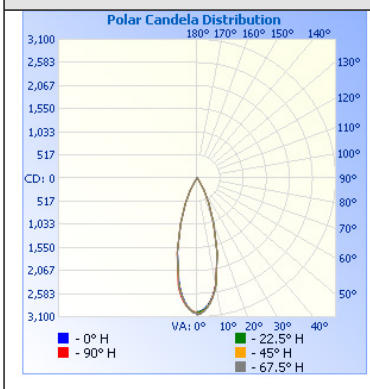

Cone of Light

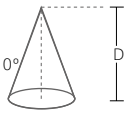

	Center Beam fc	Beam Width	
1.7	1040	1.0	1.0
3.3	276	2.0	2.0
5.0	120	3.0	3.0
6.7	57.0	4.0	4.0
8.3	43.6	5.0	5.0
10.0	30.1	6.0	6.0

Candela Table

Degrees Vertical	Candela
0.0	3007
5.0	2837
10.0	2414
15.0	1729
20.0	1076
25.0	610
30.0	291
35.0	71
40.0	27
45.0	17
50.0	11
55.0	9
60.0	7
65.0	5
70.0	5
75.0	5
80.0	4
85.0	4
90.0	3

Zonal Lumen Summary

Zone	Lumens	% Luminaire
0-30	1014.9	88.8
0-40	1086.6	95.1
10-60	1107.5	96.9
60-90	14.2	1.2
0-90	1121.7	98.2
90-180	20.9	1.8
0-180	1142.6	100.0

45° Distribution

Test Number
103233437CRT-008
Model
V2CRRU-0735K-W
Lumens
543.1
Efficacy
71.9
SC
0.863

Curve

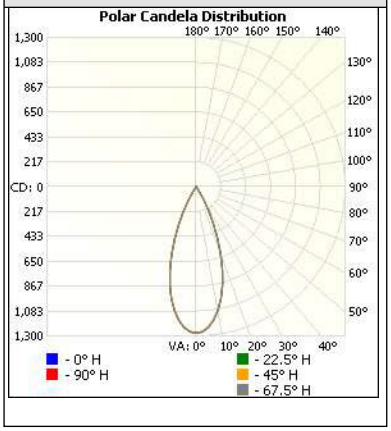

Cone of Light

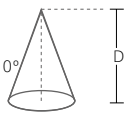

	Center Beam fc	Beam Width	
1.7	441	1.2	1.2
3.3	117	2.4	2.4
5.0	51.0	3.6	3.6
6.7	28.4	4.8	4.8
8.3	18.5	6.0	6.0
10.0	12.7	7.2	7.2

Candela Table

Degrees Vertical	Candela
0.0	1274
5.0	1227
10.0	1092
15.0	885
20.0	625
25.0	352
30.0	140
35.0	19
40.0	8
45.0	4
50.0	1
55.0	0
60.0	0
65.0	0
70.0	0
75.0	0
80.0	0
85.0	0
90.0	0

Zonal Lumen Summary

Zone	Lumens	% Luminaire
0-30	514.9	94.8
0-40	539.7	99.4
10-60	543.1	100.0
60-90	0.0	0.0
0-90	543.1	100.1
90-180	0.0	0.0
0-180	543.1	100.0

CAPELA Lumen Output Multipliers

CRI	MULTIPLIER
80	1
90	0.82

KELVIN	MULTIPLIER
4000K	1.036
3500K	1
3000K	0.974
2700K	0.94

FINISH	MULTIPLIER
SCL	1
SGC	0.95
WHT	0.87

Photometeric Data: LED 3” Regressed Lens Adjustable Downlight

Lumens/Wattage

Nominal Lumens	Wattage*	CCT*
700	7.56	3500K
1300	12.7	3500K

**Actual Wattage/Lumens may vary.*

Emergency Lumen Output

Nominal Lumens	Wattage*	CCT*
300	2.5	3500K

**Actual Wattage/Lumens may vary.*

Dim-to-Warm Performance

	100%				1%			
Nominal Lumens	Wattage	CCT	CRI	R9	Wattage	CCT	CRI	R9
700	9.7	3100	95	85	2.9	1800	95	85
1300	13.2	3100	95	85	3.3	1800	95	85