Architectural Pendalights

Job Name _____ Type _____

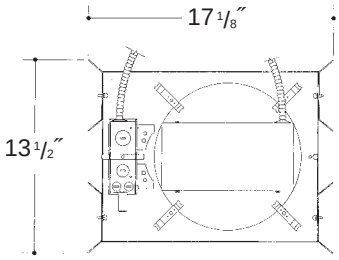

12″ LENSED OR BAFFLED INDUCTION LOAD

The Philips QL Induction lamp system is UL, FCC and CSA approved. System consists of lamp (supplied with fixture), power coupler and high frequency generator. Lamp positioned for maximum light output with minimal glare and smooth even illumination.

Extruded aluminum heat sink socket cup with wiring compartment. Generator mounted to .125″ thick heat sink for cool operation and maximum lamp life as recommended by lamp manufacturer.

Adjustable height electrogalvanized plated steel mounting ears with cutouts for various mounting methods. Standard bars (included) are innovative and incorporate rigid formed cross sections, joist positioning tabs, integral nails, auxiliary nailholes, T-Bar slots and holes for locking bars to T-Bar using #8 self-tapping screws (by others). Bars extend 14″-24″. Ears will also accept Caddy Bar #520 for fast installation in T-Bar ceilings, bars extend 27″.

Heavy gauge electrogalvanized steel junction box, prewired and grounded with easy access from below. Listed for through branch circuit wiring. Thermal cutout provided.

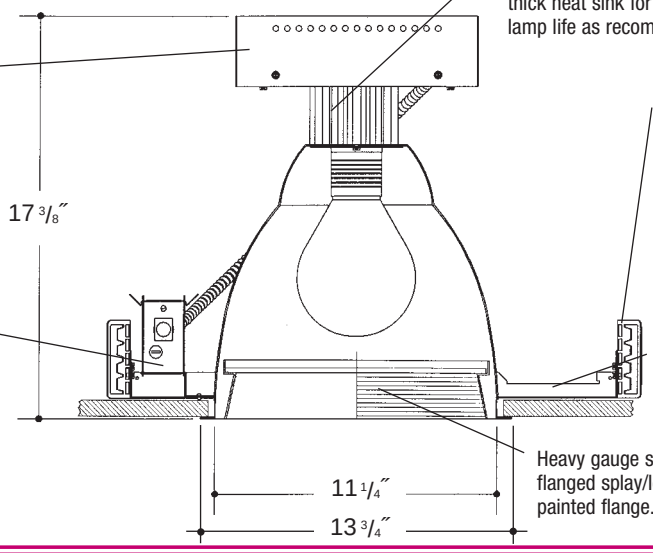

Electrogalvanized plated steel frame components with spring steel reflector clips for fast assembly of reflector. Housing designed for maximum 2″ thick ceiling.

Heavy gauge spun aluminum reflector with self trimming flanged splay/lens holder or baffled splay/lens holder and white painted flange. Polished Flange available. Safety chain provided.

Rough in Kit – 12″ Induction Load (165W, 85W or 55W Philips QL Induction Lamp System).

Catalog Number **AQL12** ___ ___ ___ ___

AQL12	Wattage	Generator	Voltage	Options
	85W MAX. 55W	E	1 2	R

Generator
- **E** Electronic

Voltage
- **1** 120 Volts
- **2** 277 Volts

Options ▲
- **R** Remodeler

Philips QL Induction Lamp included 3000°K standard

Finishing Kit – 12″ Induction Lensed or Lensed Baffled Reflector

Catalog Number ___ ___ ___

	Lens	Finish	Options
120 Lensed	12011 - Tempered Clear Lens 12014 - Tempered Prismatic Lens (C73 Pattern) 12016 - Tempered Fresnel Lens	SCL SGO WHT	WL
120 Lensed Baffled	12021 - Tempered Clear Lens 12024 - Tempered Prismatic Lens (C73 Pattern) 12026 - Tempered Fresnel Lens	SCL/BL SCL/WH	

Finish (Factory Standard)
- **SCL** Specular Clear "Alzak" Splay with White Flange
- **SGO** Specular Gold "Alzak" Splay with White Flange
- **WHT** White Splay with White Flange
- **SCL/BL** Specular Clear "Alzak" with Black Baffled Splay
- **SCL/WH** Specular Clear "Alzak" with White Baffled Splay

Options ▲
- **WL** Sealed Lens and Gasketed Flange

Features

Manufactured and Listed to UL 1598, ETL and CSA standards.

Suitable for Damp Locations

Wet location under covered ceiling

▲ See Options and Finishes pages for a list of additional finishes and equipment.

Vantage reserves the right to change components, finishes or design details in any manner which does not alter the installed appearance or reduce performance and intended function.

07/07

76 Community Avenue Plainfield, CT 06374
voice (860)564.4512 fax (860)564.4854
www.vantageltg.com

Vantage 661 Luminaires