Architectural Grade

Job Name _____ Type _____

12″ V.F. 1 LT OPEN

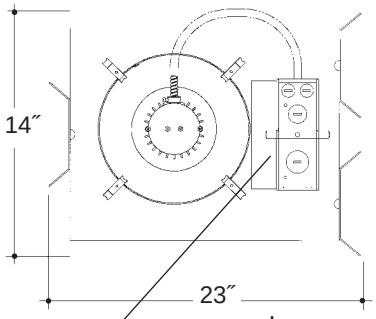

Electronic ballast, Class P, 50/60 HZ-120/277, Programmed Start, thermally protected, 98% Power Factor, 1.00 Ballast Factor, <10% THD, Class A sound rated. Minimum starting temperature -18°C/0°F.
Magnetic ballast, High Power Factor, thermally protected, minimum starting temperature 10°C/50°F.
UL Listed component.

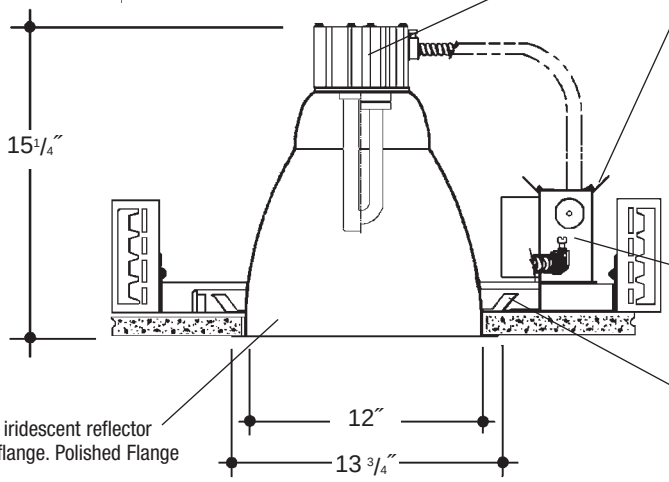

Aluminum heat sink socket cup with Zinc plated steel hardware and spring steel clips for fast assembly. *UL Listed* socket.

Adjustable height electrogalvanized plated steel mounting ears with cutouts for various mounting methods. Standard bars (included) are innovative and incorporate rigid formed cross sections, joist positioning tabs, integral nails, auxiliary nailholes, T-Bar slots and holes for locking bars to T-Bar using #8 self-tapping screws (by others). Bars extend 14″-24″. Ears will also accept Caddy Bar #520 for fast installation in T-Bar ceilings, bars extend 27″.

Heavy gauge electrogalvanized steel junction box, prewired and grounded with easy access from below, listed for through branch circuit wiring.

Electrogalvanized plated steel frame.

Heavy gauge spun aluminum low iridescent reflector with self trimming white painted flange. Polished Flange available.

Rough in Kit – 12″ Vertical Fluorescent 1-Lamp (Compact Fluorescent Triple or Quad Tube)

Catalog Number **A12VF1** ____ ____ ____ ____

A12VF1	Wattage	Ballast	Voltage	Options
	70W MAX. DT	E	1	EM
	57W DT	H	2	F
	42W PLT	DA	3	R
	32W PLT	DL	4	PR
	26W DTT, PLT			EMI
	18W DTT, PLT			

Ballast
- **E** Electronic (4 Pin Lamp)
- **H** High Power Factor (2 Pin Lamp)
- **DA** Dimming - Advance Mark X (4 Pin Lamp)
- **DL** Dimming - Lutron (4 Pin Lamp)

Voltage
- **1** 120 Volts
- **2** 277 Volts
- **3** 347 Volts (Electronic Ballast Only)
- **4** 208 Volts (Electronic Ballast Only)

Options ▲
- **EM** Emergency Battery
- **F** Fused
- **R** Remodeler
- **PR** Plaster Ring
- **EMI** Internal Mounted Emergency Test Switch

2-Lamp Not Available in **Triple Tube (DT, PLT)**
2-Lamp – Replace **A12VF1** with **A12VF2**
Electronic Multi-Tap Ballast 120V Thru 277V Factory Standard

Finishing Kit – 12″ Vertical Fluorescent Open Reflector

Catalog Number **12000** ____ ____

12000	Finish	Options
	SCL	PF
	SGO	
	WHT	

Finish (Factory Standard)
- **SCL** Specular Clear "Alzak" with White Flange
- **SGO** Specular Gold "Alzak" with White Flange
- **WHT** White Reflector with White Flange

Options ▲
- **PF** High Polished Flange

Features
Manufactured and Listed to UL 1598, ETL and CSA standards.
Suitable for Damp Locations
Wet location under covered ceiling

▲ See Options and Finishes pages for a list of additional finishes and equipment.

Vantage reserves the right to change components, finishes or design details in any manner which does not alter the installed appearance or reduce performance and intended function.

06/07

Vantage 242 Luminaires

76 Community Avenue Plainfield, CT 06374
voice (860)564.4512 fax (860)564.4854
www.vantageltg.com