Catalog #	Quantity
Project	
Notes	Date
Prepared by	

4" LED/*Capela*™

LED 4" Enclosed Micro Flange Downlight, 700-3000 Lumens

2700K 3000K 3500K 4000K

Features

Optics
Specular clear finishes
Efficient optical design
15, 30, and 45 degree beam spreads
Frosted polycarbonate Prismatic polycarbonate lens

Controls
0-10V to 10% driver standard
0-10V to 1%, 0-10V to 0.1&, Lutron, & Triac/Forward phase options

Construction
Self-flanged or micro-flanged cold-rolled steel housing
Polyester powder coat
Torsion springs for maximum ceiling retention
IC-rated up to 2,000 lumens
Optional new construction frame with quick connect

Electrical
High flux CoB array
80+ CRI standard, 90+ CRI optional
2700K, 3000K, 3500K, 4000K standard
70% lumen maintenance at 50,000 hours
Tested according to LM-79 and LM-80 standards
120 – 277V Universal Input standard

Listings
ETL certified; wet location under covered ceiling
Meets UL 1598 and UL 8750 requirements
Energy Star certified
Buy American Act

Warranty
5-year limited warranty. Complete warranty terms located at:
http://vantageltg.com/product-warranty/

Ordering Information

EXAMPLE: V4CERM-2030K-L4071FR-SCL-MD-WHT

Series/Source	Voltage	Nominal Lumens	Kelvin	Reflector	Finish	Distribution	Flange Color	Options
V4CERM 4" round, Enclosed Micro Flange	**U** – 120V-277V **1** – 120 Volts[1] **3** – 347 Volts[2]	**-07** – 700 **-13** – 1300 **-20** – 2000 **-30** – 3000	**27K** – 2700K **30K** – 3000K **35K** – 3500K **40K** – 4000K	**L4071FR** **L4074P**	**SCL**	**N** **M** **W**	**WHT** **BLK**	**DL-2**[2] **DL-3**[2] **EM**[2] **HCR** **LDE1**[2] **NCFAQ** **TDM**[1] **XDM**[2] **ZDM**[2]

Reflector Finish Options
SCL - Specular Clear

Lens Options
1FR - Frosted Polycarbonate
4P - Prismatic Polycarbonate

Distribution Options
N - 15° Distribution
M - 30° Distribution
W - 45° Distribution

Options
DL-2[2] - Lutron 2 wire Hi-Lume Dimming Driver.
DL-3[2] - Lutron 3 wire Hi-Lume Dimming Driver.
EM[2] - Emergency battery back-up. Remote test button & indicator Light
HCR - 90+ CRI
LDE1[2] - Lutron EcoSystem Fade-to-Black™
NCFAQ - New Construction Frame Advanced Quick connect
TDM[1] - Triac Dimming Driver (Foward Phase)
XDM[2] - 0-10V 0.1% Dimming
ZDM[2] - 0-10V 1% Dimming

Notes
[1]**TDM** - available only in 120V
[2]**Lutron Drivers** - please consult factory
[3]**Step-down Transformer**

Vantage reserves the right to change components, finishes or design details in any manner which does not alter the installed appearance or reduce performance and intended function. | Capela™ is a trademark of Vantage Lighting.

Photometrics

15° Distribution

Test Number
PHM-RPT-171110-D14
Diver
BRIDGELUX VERO 13
Model
V4CERU-0735K-N
Lumens
764.24
Efficacy
76.96
SC
0.9956

Curve

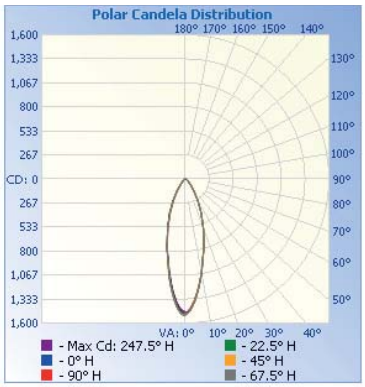

Cone of Light

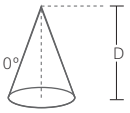

	Center Beam fc	Beam Width	
1.7	515	1.0	1.0
3.3	137	1.9	1.9
5.0	59.6	2.9	2.9
6.7	33.2	3.9	3.9
8.3	21.6	4.8	4.8
10.0	14.9	5.8	5.8

Candela Table

Degrees Vertical	Candela
0.0	1489
5.0	1323
10.0	1045
15.0	791
20.0	583
25.0	413
30.0	274
35.0	165
40.0	96
45.0	57
50.0	38
55.0	28
60.0	22
65.0	18
70.0	14
75.0	11
80.0	9
85.0	5
90.0	2

Zonal Lumen Summary

Zone	Lumens	% Luminaire
0-30	526.4	68.9
0-40	635.3	83.1
10-60	712.3	93.2
60-90	36.5	4.8
0-90	748.8	98.0
90-180	15.4	2.0
0-180	764.2	100.0

30° Distribution

Test Number
PHM-RPT-171110-D12
Diver
BRIDGELUX VERO 13
Model
V4CERU-1335K-M
Lumens
1277.64
Efficacy
94.92
SC
0.9089

Curve

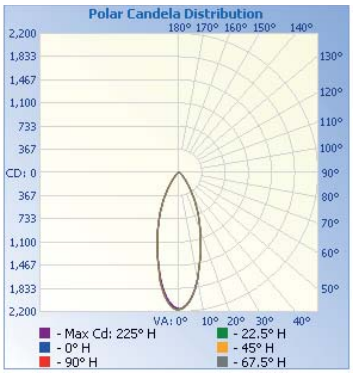

Cone of Light

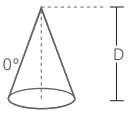

	Center Beam fc	Beam Width	
1.7	749	1.2	1.1
3.3	199	2.2	2.2
5.0	86.6	3.4	3.4
6.7	48.2	4.5	4.5
8.3	31.4	5.6	5.5
10.0	21.7	6.8	6.8

Candela Table

Degrees Vertical	Candela
0.0	2165
5.0	2018
10.0	1705
15.0	1333
20.0	998
25.0	721
30.0	485
35.0	298
40.0	173
45.0	102
50.0	65
55.0	45
60.0	34
65.0	26
70.0	20
75.0	15
80.0	11
85.0	8
90.0	3

Zonal Lumen Summary

Zone	Lumens	% Luminaire
0-30	880.9	68.9
0-40	1075.1	84.1
10-60	1204.3	94.3
60-90	51.5	4.0
0-90	1255.8	98.3
90-180	21.9	1.7
0-180	1277.6	100.0

45° Distribution

Test Number
PHM-RPT-171110-D13
Diver
BRIDGELUX VERO 13
Model
V4CERU-1335K-W
Lumens
1257.93
Efficacy
93.59
SC
0.9041

Curve

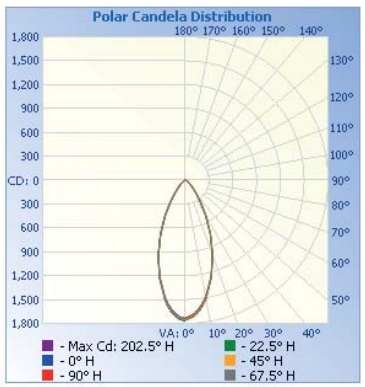

Cone of Light

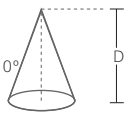

	Center Beam fc	Beam Width	
1.7	603	1.4	1.4
3.3	160	2.7	2.7
5.0	69.7	4.1	4.1
6.7	38.8	5.5	5.5
8.3	25.3	6.9	6.8
10.0	17.4	8.3	8.2

Candela Table

Degrees Vertical	Candela
0.0	1743
5.0	1673
10.0	1504
15.0	1261
20.0	1001
25.0	743
30.0	507
35.0	322
40.0	194
45.0	116
50.0	71
55.0	47
60.0	33
65.0	23
70.0	17
75.0	12
80.0	8
85.0	6
90.0	3

Zonal Lumen Summary

Zone	Lumens	% Luminaire
0-30	839.5	66.7
0-40	1050.0	83.5
10-60	1294.8	95.0
60-90	41.3	3.3
0-90	1236.1	98.3
90-180	21.9	1.7
0-180	1257.9	100.0

Dimensional Data: LED 4" Enclosed Micro Flange Downlight

Ceiling Cut Out 4.500˝

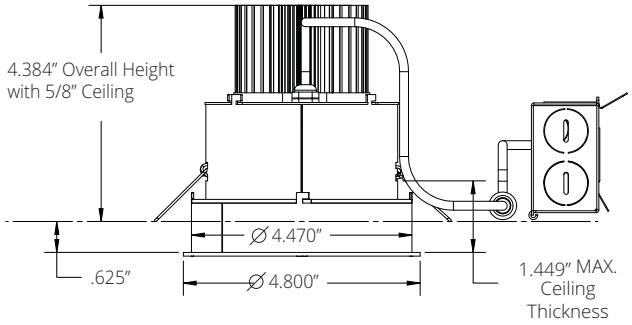

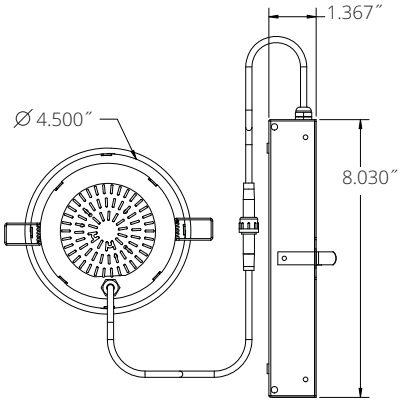

Ceiling Cut Out 4.500˝

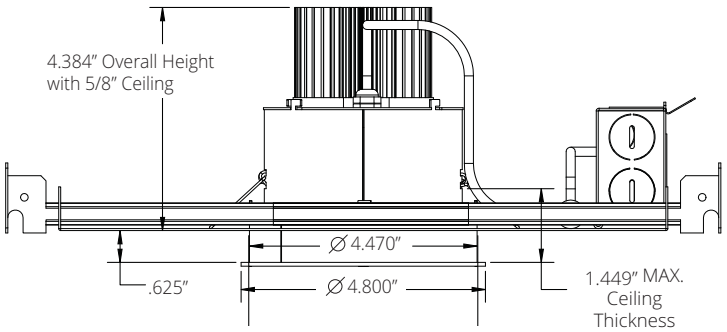

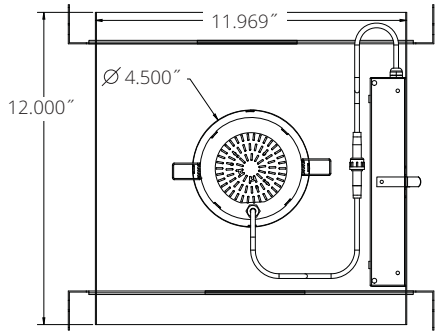

Lumens/Wattage

Nominal Lumens	Wattage*	CCT
700	7.56	3500K
1300	12.7	3500K
2000	19.6	3500K
3000	27.4	3500K

All measured at 3500K
**Actual Wattage/Lumens may vary.*

Emergency Lumen Output

Nominal Lumens	Wattage*	CCT
300	2.5	3500K

**Actual Wattage/Lumens may vary.*