Catalog #	Quantity
Project	
Notes	Date
Prepared by	

6" LED/*Capela*™

LED 6" Open Adjustable Downlight, 700-2000 Lumens, **Dim-to-Warm**

Features

Optics
Soft glow clear, specular clear and white finishes
Efficient optical design
15, 30, and 45 degree beam spreads

Controls
0-10V to 10% driver standard
0-10V to 1%, 0-10V to 0.1&, Lutron, & Triac/Forward phase options

Construction
Self-flanged or micro-flanged cold-rolled steel housing
Polyester powder coat
Torsion springs for maximum ceiling retention
IC-rated up to 2,000 lumens
Optional new construction frame with quick connect

Electrical
High flux CoB array
80+ CRI standard, 90+ CRI optional
2700K, 3000K, 3500K, 4000K standard
70% lumen maintenance at 50,000 hours
Tested according to LM-79 and LM-80 standards
120 – 277V Universal Input standard

Listings
ETL certified; wet location under covered ceiling
Meets UL 1598 and UL 8750 requirements
Energy Star certified
Buy American Act

Warranty
5-year limited warranty. Complete warranty terms located at:
http://vantageltg.com/product-warranty/

Ordering Information

EXAMPLE: V6CORADJ-20DTW-L4070-SGC-N-WHT

Series/Source	Voltage	Nominal Lumens	Dim-to-Warm	Reflector	Finish	Distribution	Flange Color	Options
V6CORADJ 6" round, Open Adjustable	U – 120V-277V 1 – 120 Volts[1] 3 – 347 Volts[2]	-07 – 700 -13 – 1300 -20 – 2000	DTW	L4070	SCL SGC WHT	N M W	WHT BLK	DL-2[2] DL-3[2] EM[2] LDE1[2] NCFAQ TDM[1] XDM[2] ZDM[2]

Reflector Finish Options
SCL - Specular Clear
SGC - Soft Glow Clear
WHT - White Painted

Distribution Options
N - 15° Distribution
M - 30° Distribution
W - 45° Distribution

Options
DL-2[2] - Lutron 2 wire Hi-Lume Dimming Driver.
DL-3[2] - Lutron 3 wire Hi-Lume Dimming Driver.
EM[2] - Emergency battery back-up. Remote test button & indicator Light
LDE1[2] - Lutron EcoSystem Fade-to-Black™
NCFAQ - New Construction Frame Advanced Quick connect
TDM[1] - Triac Dimming Driver (Foward Phase)
XDM[2] - 0-10V 0.1% Dimming
ZDM[2] - 0-10V 1% Dimming

Notes
[1]**TDM** - available only in 120V
[2]**Lutron Drivers** - please consult factory
[3]**Step-down Transformer**

Vantage reserves the right to change components, finishes or design details in any manner which does not alter the installed appearance or reduce performance and intended function. | Capela™ is a trademark of Vantage Lighting.

Dimensional Data: LED 6” Open Adjustable Downlight, DIm-to-Warm

Ceiling Cut Out 5.875˝

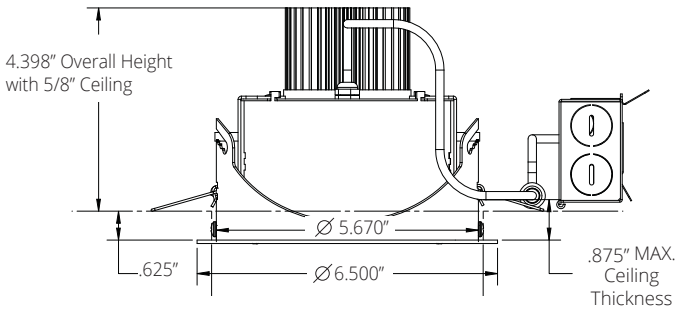

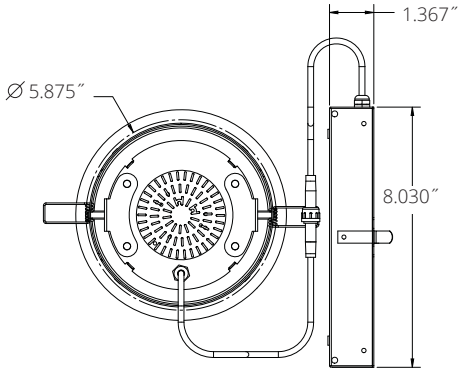

Ceiling Cut Out 5.875˝

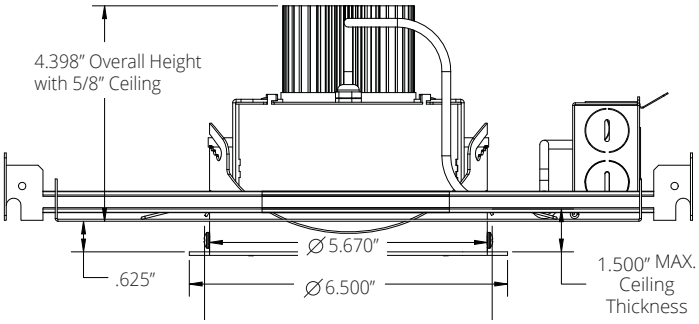

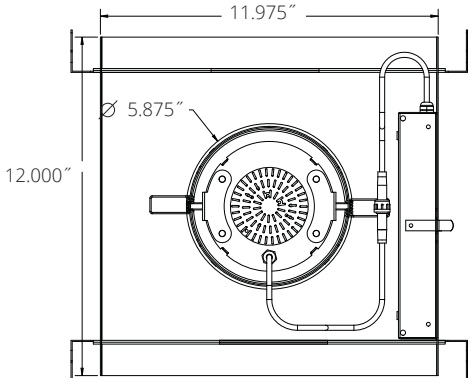

Dim-to-Warm Performance

	100%				1%			
Nominal Lumens	Wattage	CCT	CRI	R9	Wattage	CCT	CRI	R9
700	9.7	3100	95	85	2.9	1800	95	85
1300	13.2	3100	95	85	3.3	1800	95	85
2000	20.3	3100	95	85	3.8	1800	95	85

Photometrics

15° Distribution

Test Number
103268734CRT-007
Diver
BRIDGELUX VERO 13
Model
V4CORU-0735K-N
Lumens
888.7
Efficacy
95.5
SC
0.936

Curve

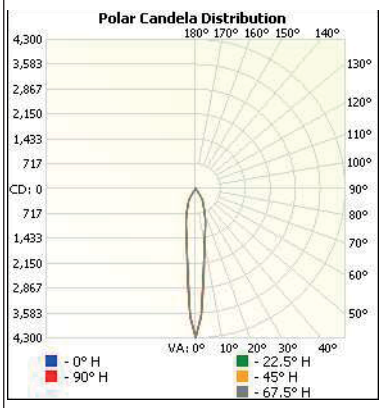

Cone of Light

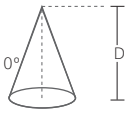

	Center Beam fc	Beam Width	
1.7	1484	0.4	0.4
3.3	394	0.7	0.8
5.0	172	1.1	1.2
6.7	95.6	1.5	1.6
8.3	62.3	1.9	2.0
10.0	42.9	2.3	2.4

Candela Table

Degrees Vertical	Candela
0.0	4290
5.0	2511
10.0	1478
15.0	1083
20.0	768
25.0	523
30.0	410
35.0	142
40.0	24
45.0	5
50.0	4
55.0	8
60.0	8
65.0	5
70.0	4
75.0	2
80.0	1
85.0	0
90.0	0

Zonal Lumen Summary

Zone	Lumens	% Luminaire
0-30	763.2	85.9
0-40	868.1	97.7
10-60	880.2	99.0
60-90	8.5	1.0
0-90	888.7	100.0
90-180	0.0	0.0
0-180	888.7	100.0

30° Distribution

Test Number
103268734CRT-006
Diver
BRIDGELUX VERO 13
Model
V4CORU-1335K-M
Lumens
1298.7
Efficacy
97.3
SC
0.963

Curve

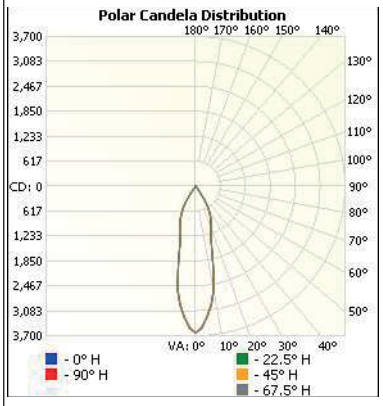

Cone of Light

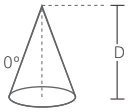

	Center Beam fc	Beam Width	
1.7	1258	0.8	0.8
3.3	334	1.6	1.6
5.0	145	2.4	2.4
6.7	81.0	3.2	3.2
8.3	52.8	4.0	4.0
10.0	36.3	4.8	4.8

Candela Table

Degrees Vertical	Candela
0.0	3634
5.0	3246
10.0	2577
15.0	1514
20.0	1094
25.0	883
30.0	618
35.0	210
40.0	33
45.0	3
50.0	2
55.0	2
60.0	1
65.0	0
70.0	0
75.0	0
80.0	0
85.0	0
90.0	0

Zonal Lumen Summary

Zone	Lumens	% Luminaire
0-30	1130.7	87.1
0-40	1291.3	99.4
10-60	1298.4	100.0
60-90	0.0	0.0
0-90	1298.7	100.0
90-180	0.0	0.0
0-180	1298.7	100.0

45° Distribution

Test Number
103268734CRT-008
Diver
BRIDGELUX VERO 13
Model
V4CORU-2035K-W
Lumens
1854.3
Efficacy
92.2
SC
0.992

Curve

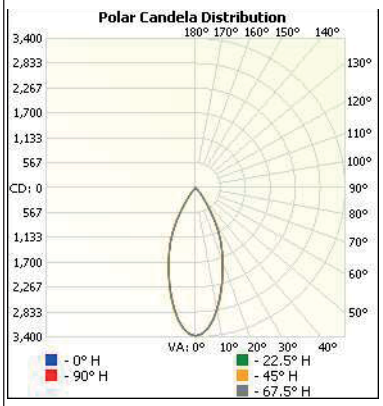

Cone of Light

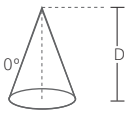

	Center Beam fc	Beam Width	
1.7	1167	1.3	1.3
3.3	310	2.5	2.6
5.0	135	3.9	3.9
6.7	75.2	5.2	5.2
8.3	49.0	6.4	6.5
10.0	33.7	7.7	7.8

Candela Table

Degrees Vertical	Candela
0.0	3374
5.0	3208
10.0	2803
15.0	2292
20.0	1778
25.0	1347
30.0	866
35.0	400
40.0	174
45.0	48
50.0	0
55.0	0
60.0	0
65.0	0
70.0	0
75.0	0
80.0	0
85.0	0
90.0	0

Zonal Lumen Summary

Zone	Lumens	% Luminaire
0-30	1538.2	83.0
0-40	1812.0	97.7
10-60	1854.3	100.0
60-90	0.0	0.0
0-90	1854.3	100.0
90-180	0.0	0.0
0-180	1854.3	100.0