Catalog #	Quantity
Project	
Notes	Date
Prepared by	

2" LED/*Capela*™

LED 2" Open Downlight, 700-1300 Lumens

2700K 3000K 3500K 4000K

Features

Optics
Soft glow clear, specular clear and white finishes
Efficient optical design
15, 30, and 45 degree beam spreads

Controls
0-10V to 10% driver standard
0-10V to 1%, 0-10V to 0.1&, Lutron, & Triac/Forward phase options

Construction
Self-flanged or micro-flanged cold-rolled steel housing
Polyester powder coat
Torsion springs for maximum ceiling retention
IC-rated up to 2,000 lumens
Optional new construction frame with quick connect

Electrical
High flux CoB array
80+ CRI standard, 90+ CRI optional
2700K, 3000K, 3500K, 4000K standard
70% lumen maintenance at 50,000 hours
Tested according to LM-79 and LM-80 standards
120 – 277V Universal Input standard

Listings
ETL certified; wet location under covered ceiling
Meets UL 1598 and UL 8750 requirements
Energy Star certified
Buy American Act

Warranty
5-year limited warranty. Complete warranty terms located at:
http://vantageltg.com/product-warranty/

Ordering Information

EXAMPLE: V2COR-0730K-L2070-SGC-N-WHT

Series/Source	Voltage	Nominal Lumens	Kelvin	Reflector	Finish	Distribution	Flange Color	Options
V2COR 2" round, Open	U – 120V-277V 1 – 120 Volts[1] 3 – 347 Volts[2]	-07 – 700 -13 – 1300	27K – 2700K 30K – 3000K 35K – 3500K 40K – 4000K	L2070	SCL SGC WHT	N M W	WHT BLK	DL-2[2] DL-3[2] EM[2] HCR LDE1[2] NCFAQ TDM[1] XDM[2] ZDM[2]

Reflector Finish Options
SCL - Specular Clear
SGC - Soft Glow Clear
WHT - White Painted

Distribution Options
N - 15° Distribution
M - 30° Distribution
W - 45° Distribution

Options
DL-2[2] - Lutron 2 wire Hi-Lume Dimming Driver
DL-3[2] - Lutron 3 wire Hi-Lume Dimming Driver
EM[2] - Emergency battery back-up. Remote test button & indicator Light
HCR - 90+ CRI
LDE1[2] - Lutron EcoSystem Fade-to-Black™
NCFAQ - New Construction Frame Advanced Quick connect
TDM[1] - Triac Dimming Driver (Foward Phase)
XDM[2] - 0-10V 0.1% Dimming
ZDM[2] - 0-10V 1% Dimming

Notes
[1]**TDM** - available only in 120V
[2]**Lutron Drivers** - please consult factory
[3]**Step-down Transformer**

Vantage reserves the right to change components, finishes or design details in any manner which does not alter the installed appearance or reduce performance and intended function. | Capela™ is a trademark of Vantage Lighting.

Dimensional Data: LED 2” Open Downlight

Ceiling Cut Out 3.250˝

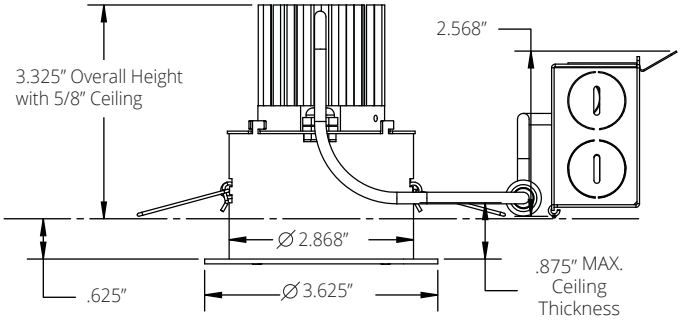

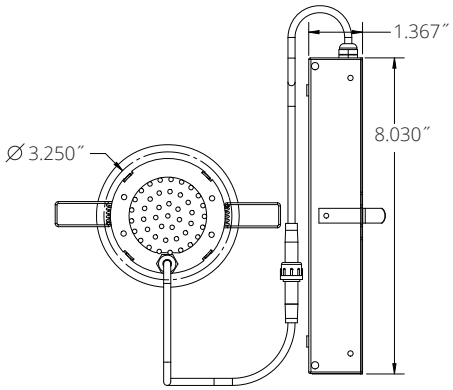

Ceiling Cut Out 3.250˝

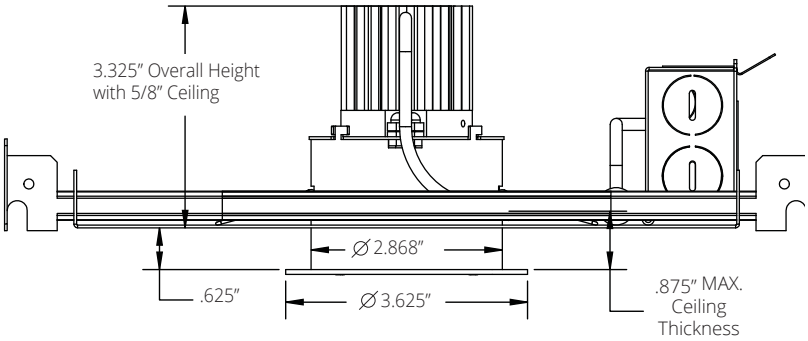

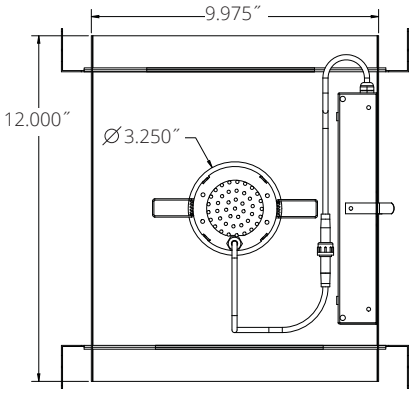

Lumens/Wattage

Nominal Lumens	Wattage*	CCT*
700	7.56	3500K
1300	12.7	3500K

**Actual Wattage/Lumens may vary.*

Emergency Lumen Output

Nominal Lumens	Wattage*	CCT*
300	2.5	3500K

**Actual Wattage/Lumens may vary.*

Photometrics

15° Distribution

Test Number
103233437CRT-007
Diver
BRIDGELUX VERO 13
Model
V2CORU-1335K-N
Lumens
1220.7
Efficacy
88.3
SC
0.989

Curve

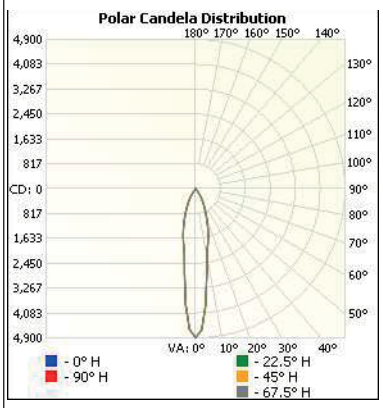

Cone of Light

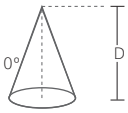

	Center Beam fc	Beam Width	
1.7	1693	0.5	0.5
3.3	449	1.0	1.0
5.0	196	1.5	1.6
6.7	109	2.1	2.1
8.3	71.0	2.5	2.6
10.0	48.9	3.1	3.1

Candela Table

Degrees Vertical	Candela
0.0	4894
5.0	3787
10.0	2098
15.0	1579
20.0	1073
25.0	690
30.0	429
35.0	172
40.0	34
45.0	12
50.0	7
55.0	10
60.0	19
65.0	13
70.0	7
75.0	4
80.0	2
85.0	1
90.0	0

Zonal Lumen Summary

Zone	Lumens	% Luminaire
0-30	1059.7	86.8
0-40	1278.9	96.6
10-60	1201.8	98.4
60-90	19.0	1.6
0-90	1220.7	100.0
90-180	0.0	0.0
0-180	1220.7	100.0

30° Distribution

Test Number
103233437CRT-005
Diver
BRIDGELUX VERO 13
Model
V2CORU-1335K-M
Lumens
1233.7
Efficacy
87.4
SC
0.989

Curve

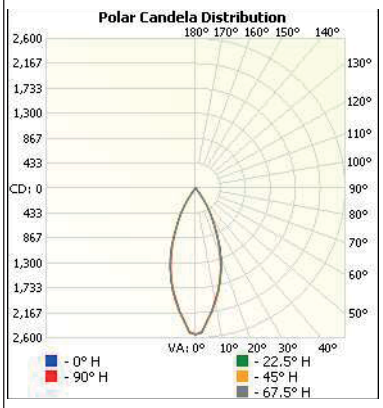

Cone of Light

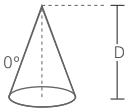

	Center Beam fc	Beam Width	
1.7	879	1.3	1.2
3.3	233	2.4	2.4
5.0	102	3.7	3.5
6.7	56.6	4.9	4.8
8.3	36.9	5.1	5.9
10.0	25.4	7.4	7.1

Candela Table

Degrees Vertical	Candela
0.0	2541
5.0	2313
10.0	2000
15.0	1653
20.0	1286
25.0	871
30.0	526
35.0	229
40.0	53
45.0	17
50.0	7
55.0	5
60.0	4
65.0	2
70.0	2
75.0	2
80.0	1
85.0	0
90.0	0

Zonal Lumen Summary

Zone	Lumens	% Luminaire
0-30	1057.5	85.7
0-40	1205.9	97.7
10-60	1228.7	99.6
60-90	5.0	0.4
0-90	1233.7	100.0
90-180	0.0	0.0
0-180	1233.7	100.0

45° Distribution

Test Number
103233437CRT-006
Diver
BRIDGELUX VERO 13
Model
V2CORU-1335K-W
Lumens
1212.9
Efficacy
87.2
SC
0.989

Curve

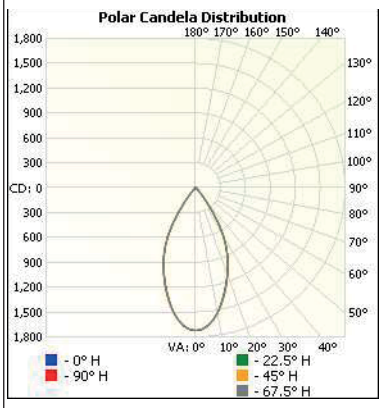

Cone of Light

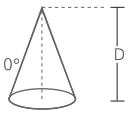

	Center Beam fc	Beam Width	
1.7	596	1.7	1.7
3.3	158	3.2	3.2
5.0	68.8	4.9	4.9
6.7	38.3	5.5	6.5
8.3	25.0	8.1	8.1
10.0	17.2	9.8	9.8

Candela Table

Degrees Vertical	Candela
0.0	1721
5.0	1674
10.0	1526
15.0	1322
20.0	1114
25.0	908
30.0	658
35.0	339
40.0	124
45.0	45
50.0	9
55.0	2
60.0	2
65.0	1
70.0	0
75.0	0
80.0	0
85.0	0
90.0	0

Zonal Lumen Summary

Zone	Lumens	% Luminaire
0-30	933.5	77.0
0-40	1162.2	95.8
10-60	1209.6	99.7
60-90	3.3	0.3
0-90	1212.9	100.0
90-180	0.0	0.0
0-180	1212.9	100.0